International Engineering Research Journal Page No 65-68

Finite Element Analysis of Compliant Pantograph Mechanism

Vijay Patil, P. R. Anerao, and S. S. Chinchanikar

Abstract— **Micropositioning mechanism is a key and essential technology in many fields, such as scanning electron microscopy, X-ray lithography and micro-electro mechanical system (MEMS). Recently, there have been quite a number of studies on the analysis and design of micropositioning mechanisms with flexure hinges. The flexure hinge should be designed in such a way that it not only minimize the number of actuators, but also ensures positional accuracy and sufficient workspace. The flexure hinges are relatively new strategy for providing zero backlash rotation. Therefore, due to their advantages compliant mechanisms are found to be more convenient over these rigid body mechanisms. The purpose of this research is to investigate the use of compliant mechanism in linear displacement applications. Therefore pantograph mechanism are very well suited for positioning resolution by scale down the motion of linear stage and design, analyze and test a pantograph compliant mechanism.**

***Index Terms*:- Pantograph Mechanism, Compliant Mechanism, Deflection, Stress.**

I. Introduction

A Mechanism with flexible segments is simpler and replaces multiple rigid parts, pin joints. Compliant mechanisms provide a joint less alternative to conventional rigid body mechanisms eliminating issues of friction, wear, weight, noise, lubrication and backlash and important maintenance shown in fig. 1 Due to the limitations of micro fabrication methods, structures in precision applications have to be monolithic and assembly must be avoided. Hence it can often safe space and reduces cost of parts, material and assembly. The absence of hinges or joints makes compliant mechanism attractive for many emerging applications like precision application, micro-electro mechanical system (MEMS), gyroscopes, accelerometers, balance scales, missile control nozzles so mechanical displacement amplifier is used to increase the output displacement. Therefore they are very well suited for micro fabrication.

Vijay Patil, PG Student, Mechanical Engg. Department, Vishwakarma Institute of Information Technology, Kondhawa (BK), Pune-411048, India (e-mail: vijaypatil5691@gmail.com)

P. R. Anerao, Assistant Professor, Mechanical Engg. Department, Vishwakarma Institute of Information Technology, Kondhawa (BK), Pune-411048, India (e-mail: prashant.anerao@viit.ac.in)

Dr. S. S. Chinchanikar Professor and Head Department of Mechanical Engg. Department, Vishwakarma Institute of Information Technology, Kondhawa (BK), Pune-411048, India (e-mail: satish.chinchanikar@viit.ac.in)

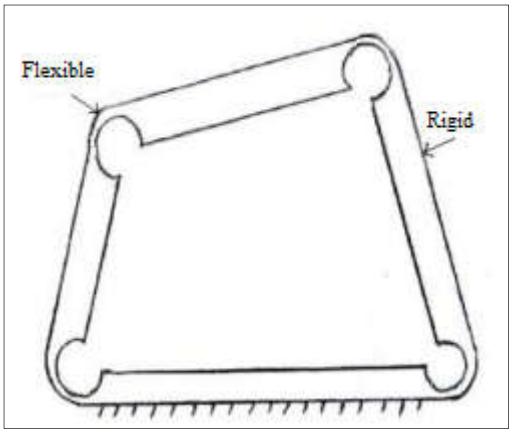

Figure 1:- Compliant Mechanism [1]

A precise compliant stage model will benefit for researchers, at least, the design and optimization phases where a good estimation of workspace or stiffness of a micro-motion stage could be realized. A compliant micro-motion stage normally uses a few flexure hinges to provide the desired motions of the stage in various directions. The accuracy of a compliant stage model relies on the precision of flexure hinge modeling.

II. Design Consideration of Compliant Mechanism

The pseudo-rigid-body model (PRBM) [2] is used to simplify the analysis and design of compliant mechanisms. The pseudo-rigid-body model, on the other hand, may be used to obtain a preliminary design which may then be optimized. Once a design is obtained such that it meets the specified design objectives, it may be further refined using methods such as nonlinear finite element analysis, and it may then be prototyped and tested.

The geometry of the thinning is usually a pair of opposed cylindrical grooves. A leaf hinge has historically been created by clamping a thin plate between two rigid bodies. The result is a thinned out piece of material connecting two rigid bodies formed of the same material. Notch hinges are created by machining symmetrical circular patterns from each side of a solid body creating a thin path between two rigid bodies. A notched flexure has the additional advantage over a simple leaf flexure, because it can be assembled with almost 100% efficiency.

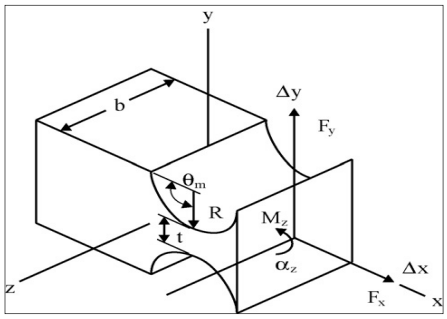

Figure 2:- A Circular Flexure Hinge [3]

The stiffness of the flexure hinges determines the elastic deformation achieved by the complaint mechanisms. Then stiffness for the hinge is taken as

$$K = 2Ebt^{2.5}/9\pi R^{0.5}$$

Where,
K = Torsional stiffness of the spring
E = Young's Modulus of material used
b = Thickness of the plate used
t = Hinge Thickness
R = Hinge radius

These methods provide better accuracies than the others depending on the wide range of t/R ratios ($0.05 \leq t/R \leq 0.8$) of circular flexure hinges.

Table 1:- Hinge Dimensions of pantograph mechanism

Parameters	**Dimensions** (mm)
Thickness of the plate (b)	5
Hinge Thickness (t)	1
Hinge radius (R)	4.5

And t/R ratio = 1/4.5 = 0.22

A. Pantograph Mechanism Synthesis

A pantograph is a mechanical linkage connected in a manner based on parallelogram. It is a geometrical instrument used in drawing offices for reproducing given geometrical figures or plane areas of any shape, on an enlarged or reduced scale. It is also used for guiding cutting tools. Its mechanism is utilized as an indicator rig for reproducing the displacement of cross-head of a reciprocating engine which, in effect, gives the position of displacement.

Design of pantograph mechanism to be used in straight line mechanism which represents six times amplification ratio (R) of given input value. This pantograph mechanism design over100 to 100 mm scanning area. Therefore we consider the distance between fixed point (O) and end point (E) of pantograph mechanism is 75mm.

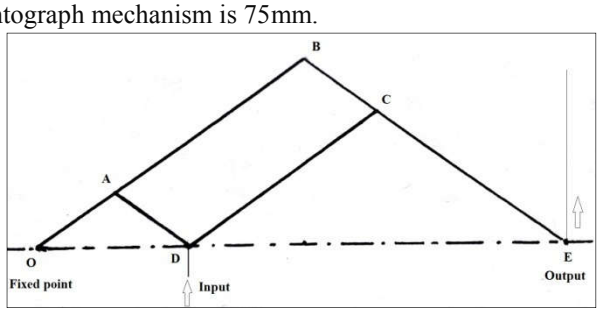

Figure 3:- Pantograph mechanism [4]

$$R = \frac{OE}{OD} = \frac{OB}{OA} = \frac{BE}{AD} \qquad (1)$$

$$6 = \frac{75}{OD}$$

$$OD = 12.5\ mm$$

OBE,

$$OB + BE > OE$$

OBE is isosceles triangle, should satisfy the following condition

$$OB > \frac{OE}{2} > \frac{75}{2} > 37.5mm$$

According to Pythagoras theorem,
OB = BE =53.033 > 37.5
From (1) OA = 8.8388 mm
Therefore,
AB = OB – OA = 53.033– 8.8388 = 44.1941 mm
Again from (1) AD = 8.8388 mm
Because, OB = BE as OBE is isosceles triangle.
Therefore AD = BC = 8.8388 mm

III. METHODOLOGY OF FEA

First pantograph model is prepared in CATIA-V5. After that it is imported in the ANSYS workbench14.5. Once geometry cleanup is done then model is further preceded for meshing. Fine meshing is done, after that proper boundary conditions are applied. Final results are obtained after solution conversions. In figure below steps are given,

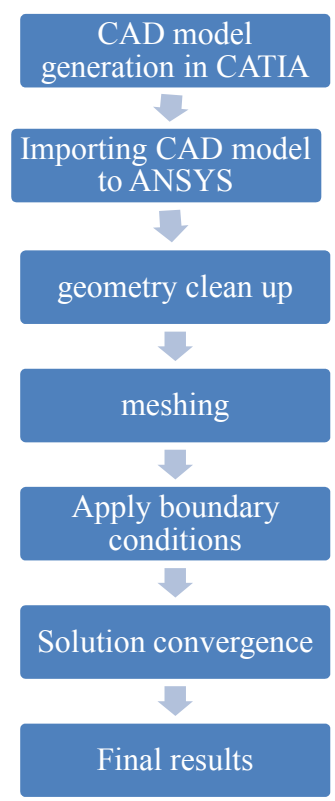

Figure 4:- Methodology

IV. FINITE ELEMENT ANALYSIS

The Finite Element analysis of pantograph compliant mechanisms is to be done on ANSYS Workbench 14.5. The purpose of analysis was the maximum stresses observed in the mechanism and stresses in flexural member within elastic limit. The material properties for mechanism with two different materials are shown in table.

Table 2:- Material properties [5] [6] for aluminum alloy 6061 (Al6061) and stainless steel AISI 410 annealed are mainly used in compliant mechanisms.

	Al 6061	**SS 410**
Ultimate Stress (S_{ut})	310Mpa	483Mpa
Young's Modulus (E)	73Gpa	200Gpa
Tensile Yield Strength (S_t)	300Mpa	434Mpa

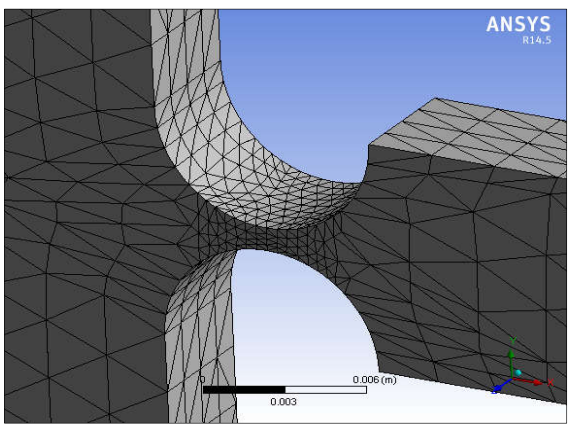

Figure 5:- Meshed model of pantograph mechanism

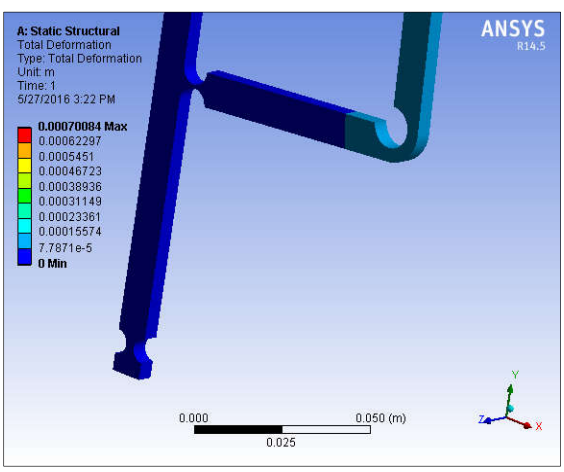

Figure 6:- Total Deformation of pantograph mechanism with AL alloy 6061 material

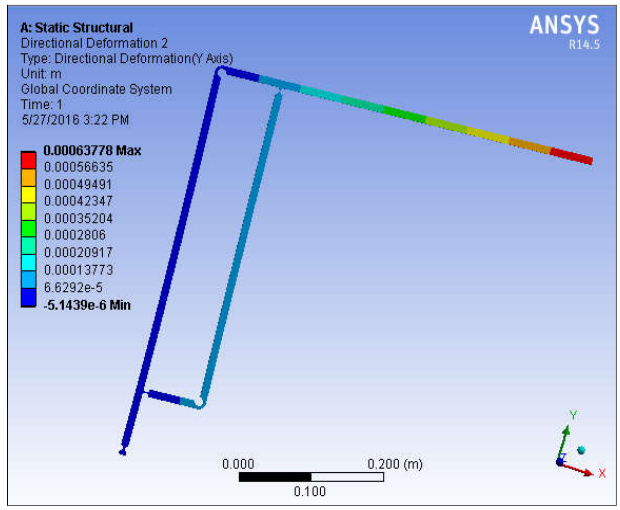

Figure 7:- Directional Deformation of pantograph mechanism with AL alloy 6061 material

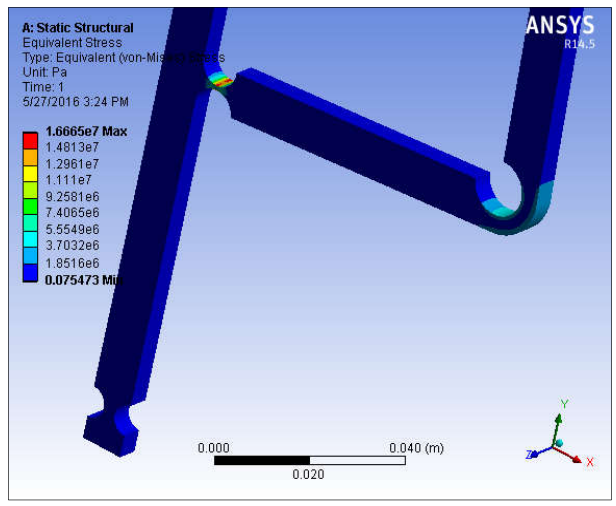

Figure 8:- Stress Distribution of Pantograph Mechanism

According to von-misses stress theory its state that a material would undergo failure only when the maximum stress at any point on a body is greater than or equals to the stress at elastic limit. Meshed model of pantograph mechanism shown in fig.5.

In this case aluminum alloy 6061 material is used which has stress value of 300Mpa at elastic limit and the maximum stress has observed through CAE analysis in the mechanism is only 16.66Mpa. As shown in fig. 8. So, one can deduce that the mechanism is safe. For input displacement of 0.1 mm the compliant mechanism gives out put displacement of 0.70084 mm. due to flexural structure it gives value more than the amplification ratio 1:6. Directional Deformation along Y axis of pantograph mechanism with AL alloy 6061 material is 0.63778mm shown in fig. 7.

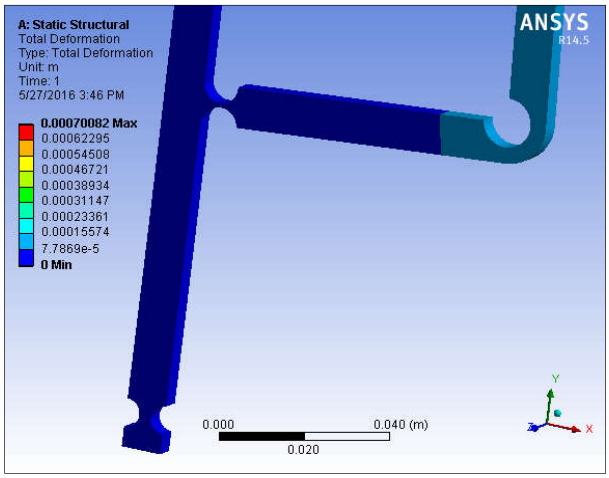

Figure 9:- Total Deformation of pantograph mechanism with SS 410 material

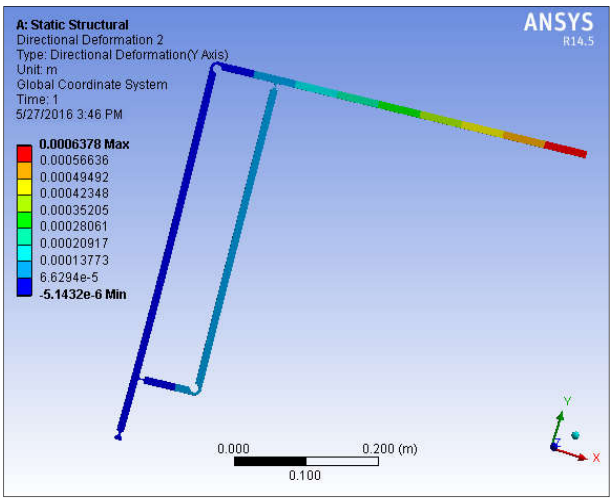

Figure 10:- Directional Deformation of pantograph mechanism with SS 410

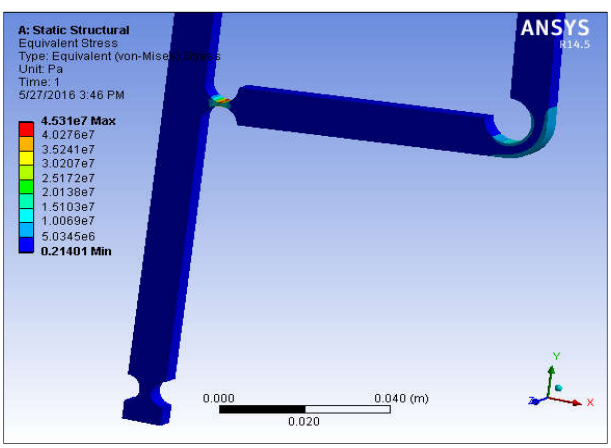

Figure 11:- Stress Distribution of Pantograph Mechanism

In this case stainless steel AISI 410 annealed material is used which has stress value of 434Mpa at elastic limit and the maximum stress has observed through CAE analysis in the mechanism is only 45.31Mpa. As shown in fig. 11 So, one can deduce that the mechanism is safe. For input displacement of 0.1 mm the compliant mechanism gives out put displacement of 0.70082 mm. Directional Deformation along Y axis of pantograph mechanism with stainless steel AISI 410 annealed is 0.6378mm shown in fig. 10.

V. Conclusion

Inaccurate modeling of the flexure hinge does not assure the precise motion of the micromechanism. More precise modeling of the flexure hinge mechanism is necessary to enhance the positional accuracy of microsystems. In this paper Synthesis of pantograph mechanism over a scanning area 100 to 100 mm displacement is to be design and ratio of hinge thickness (t) to the hinge radius (R) i.e. t/R = 0.22. Displacement and stress analysis of pantograph compliant mechanism with aluminum alloy 6061 and stainless steel AISI 410 annealed materials is done on the ANSYS Workbench 14.5 Software. The results shows that the maximum stress has observed through CAE analysis in the mechanism is less than stress value of 300Mpa and 434Mpa at elastic limit of material respectively.

References

[1] L. L. Howell, “Compliant Mechanisms,” New York: John Wiley, 2009.
[2] N. Lobontiu, “Compliant Mechanisms Design of Flexure Hinges,” 2002.
[3] Yuen Kuan Yong and et al., “Review of circular flexure hinge design equations and derivation of empirical formulations,” Precision Engineering, vol. 32, (2008), pp.63–70.
[4] C. S. Sharma, K. Purohit, “Theory Of Mechanisms And Machines,” Technology & Engineering, pp. 119-120, 2006.
[5] Norton R.L, Machine design, 2nd Ed. Prentice Hall, Upper Saddle River.NJ. 2000
[6] Shigley J.E. and Mischke, C.R. Mechanical Engineering Design, 6th Ed. McGraw- Hill New York 2001.
[7] Y. K. Yong, S. S. Aphale and et al., “Design, Identification, and Control of a Flexure-Based *XY* Stage for Fast Nanoscale Positioning,” IEEE Transactions On Nanotechnology, vol. 8, january 2009, pp- 46-54.
[8] Yuen Kuan Yong and Tien-Fu Lu, “,Comparison of circular flexure hinge design equations and the derivation of empirical stiffness formulations,” International Conference on Advanced Intelligent Mechatronics, Singapore, July, 2009, pp. 14-17.
[9] Yuen Kuan Yong and Tien-Fu Lu, “The effect of the accuracies of flexure hinge equations on the output compliances of planar micro-motion stages,” Mechanism and Machine Theory, vol. 43 (2008), pp. 347–363.